ELKAY®
SPECIFICATIONS

Elkay Lustertone® Classic Stainless Steel 22" x 19-1/2" x 5-1/2" Single Bowl Drop-in Classroom ADA Sink Kit
Model(s) DRKAD222055C

PRODUCT SPECIFICATIONS

Elkay Lustertone® Classic Stainless Steel 22" x 19-1/2" x 5-1/2" Single Bowl Drop-in Classroom ADA Sink Kit. Sink is manufactured from 18 gauge 304 Stainless Steel with a Lustrous Satin finish, Rear Center drain placement, and Bottom only pads.

Installation Type:	Drop-in, Sink Kits
Material:	304 Stainless Steel
Finish:	Lustrous Satin
Gauge:	18
Sound Deadening:	Bottom only pads
Number of Bowls:	1
Sink Dimensions:	22" x 19-1/2" x 5-1/2"
Bowl 1 Dimensions:	13-1/2" x 16" x 5-3/8"
Drain Size:	3-1/2" (89mm)
Drain Location:	Rear Center
Minimum Cabinet Size:	27"
Mounting Hardware:	Part # 64090012 included for countertops up to 3/4" (19mm) thick
Template Included:	No
Cutout Template #:	1000001255

Template is available for download at elkay.com. CAD software will be required to open the template.

Cutout Dimensions for Drop-in Installation:
21-3/8" x 18-7/8" (543mm x 479mm) with 1-1/2" (38mm) corner radius

Installation Profile:

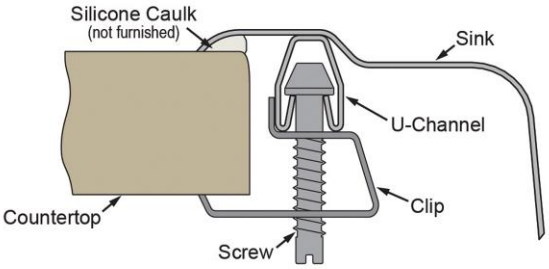

Included with Product: **LKD2439C faucet, LK1141A bubbler, LK35 strainer**

A Century of Tradition and Quality.
For more than 100 years, Elkay has been making innovative products and providing exceptional customer care. We take pride in offering plumbing products that make life easier, inspire change and leave the world a better place.

Product Compliance: ADA & ICC A117.1
ASME A112.19.3/CSA B45.4
Faucet: ASME A112.18.1/CSA B125.1
CEC
NSF 372 (lead free)
NSF 61 (Q≤1)
Accessory: ASME A112.18.2/CSA B125.2

Complies with ADA & ICC A117.1 accessibility requirements when installed according to the requirements outlined in these standards.

Clean and Care Manual (PDF)
Installation Instructions (PDF) - 1000005236
Installation Instructions (PDF) - 0000000998
Installation Instructions (PDF) - A55068_Bubbler
Installation Instructions (PDF) - 1000005235_drain
Warranty (PDF)

Similar models are available with: 4" 4-1/2" 5" 6" and 6-1/2" depths, Quick-Clip Mounting System

PART:_____QTY: _____
PROJECT:_____
CONTACT:_____
DATE:_____
NOTES:_____
APPROVAL:_____

In keeping with our policy of continuing product improvement, Elkay reserves the right to change product specifications without notice. Please visit elkay.com for the most current version of Elkay product specification sheets. This specification describes an Elkay product with design, quality, and functional benefits to the user. When making a comparison of other producers' offerings, be certain these features are not overlooked.

Included Accessories		
LK1141A	Elkay Flexi-Guard Classroom Bubbler Spec Sheet (PDF)	
LK35	Elkay 3-1/2" Drain Fitting Type 304 Stainless Steel Body Strainer Basket and Tailpiece Spec Sheet (PDF)	

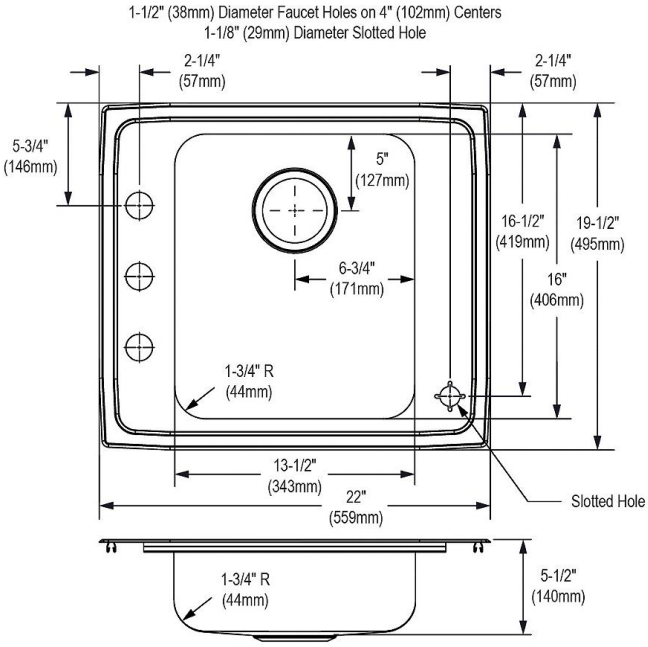

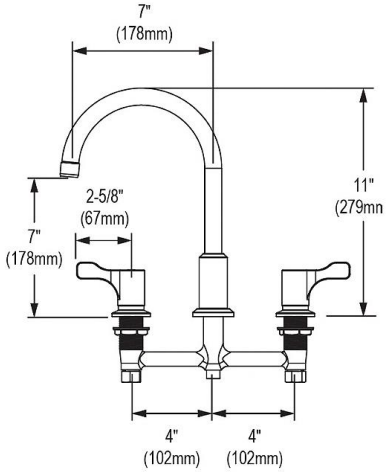

In keeping with our policy of continuing product improvement, Elkay reserves the right to change product specifications without notice. Please visit elkay.com for the most current version of Elkay product specification sheets. This specification describes an Elkay product with design, quality, and functional benefits to the user. When making a comparison of other producers' offerings, be certain these features are not overlooked.