ELKAY®
SPECIFICATIONS

Elkay Quartz Classic 24-5/8" x 18-1/2" x 9-1/2" Single Bowl Undermount Sink Kit with Filtered Faucet
Model(s) ELGU2522FLC

PRODUCT SPECIFICATIONS

Elkay Quartz Classic® 24-5/8" x 18-1/2" x 9-1/2" Single Bowl Undermount Sink Kit with Filtered Faucet. Sink is molded with up to 80% natural quartz and high performance acrylic resins that are non-porous providing superior heat, scratch, fade and stain resistance. Naturally sound deadening and Rear Center drain placement.

Installation Type:	Sink Kits, Undermount
Material:	Quartz
Finish:	Black (BK), Greystone (GS), Mocha (MC), White (WH)
Number of Bowls:	1
Sink Dimensions:	24-5/8" x 18-1/2" x 9-1/2"
Bowl 1 Dimensions:	22-5/16" x 16-7/16" x 9-1/2"
Drain Size:	3-1/2" (89mm)
Drain Location:	Rear Center
Minimum Cabinet Size:	30"
Mounting Hardware:	Included
Template Included:	Yes
Cutout Template #:	0000001437

Template is available for download at elkay.com. CAD software will be required to open the template.

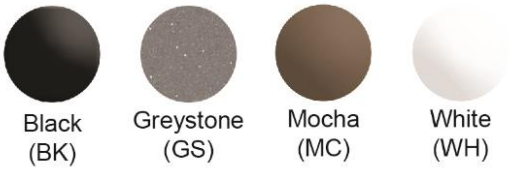

Installation Profile:

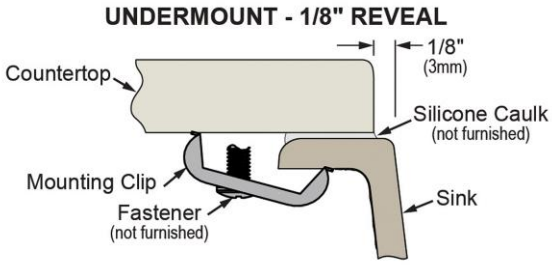

Designed to affix to the underside of any solid surface countertop.

Included with Product: **LKAV7051FCR Faucet with filter included, LKQS35 Drain, LKOBG2217SS Bottom Grid**

A Century of Tradition and Quality. For more than 100 years, Elkay has been making innovative products and providing exceptional customer care. We take pride in offering plumbing products that make life easier, inspire change and leave the world a better place.

KBB READERS' CHOICE AWARDS 2023

Product Compliance:

Faucet:	CSA B45.5/IAPMO Z124 ASME A112.18.1/CSA B125.1 NSF 61 NSF 372 (lead free)
Accessory:	ASME A112.18.2/CSA B125.2 NSF 42 NSF 53

Clean and Care Manual (PDF)
Installation Instructions (PDF) - 1000005238
Warranty (PDF)

PART:_____QTY: _____
PROJECT:_____
CONTACT:_____
DATE:_____
NOTES:_____
APPROVAL:_____

In keeping with our policy of continuing product improvement, Elkay reserves the right to change product specifications without notice. Please visit elkay.com for the most current version of Elkay product specification sheets. This specification describes an Elkay product with design, quality, and functional benefits to the user. When making a comparison of other producers' offerings, be certain these features are not overlooked.

© 2023

Elkay Quartz Classic 24-5/8" x 18-1/2" x 9-1/2" Single Bowl Undermount Sink Kit with Filtered Faucet

Model(s) ELGU2522FLC

Included Accessories		
LKCLKIT	Elkay Sink Cleaning Kit Spec Sheet (PDF)	
LKAV7051FCR	Elkay Avado Single Hole 2-in-1 Kitchen Faucet with Filtered Drinking Water Chrome Spec Sheet (PDF)	
LKOBG2217SS	Elkay Stainless Steel 19-13/16" x 13-13/16" x 1-1/4" Bottom Grid Spec Sheet (PDF)	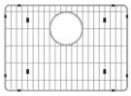
LKQS35	Elkay Polymer 3-1/2" Drain Fitting with Removable Basket Strainer and Rubber Stopper Spec Sheet (PDF)	

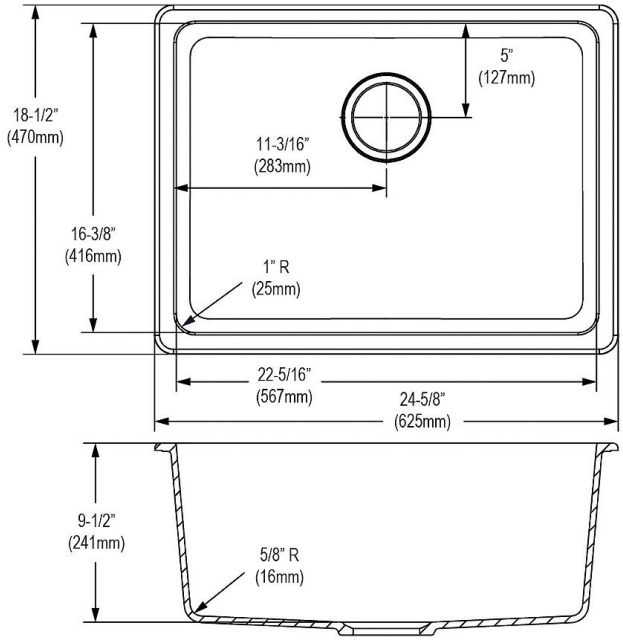

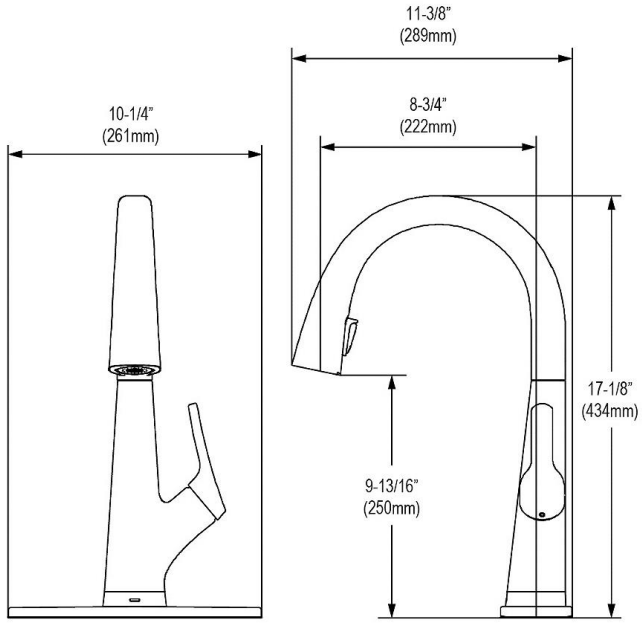

Optional Accessories		
LKCBEG2217HW	Elkay Hardwood 23-1/4" x 17-3/8" x 1" Cutting Board Spec Sheet (PDF)	
LK99	Elkay Deluxe 3-1/2" Drain Type 304 Stainless Steel Body Strainer Basket Rubber Seal and Tailpiece Spec Sheet (PDF)	

In keeping with our policy of continuing product improvement, Elkay reserves the right to change product specifications without notice. Please visit elkay.com for the most current version of Elkay product specification sheets. This specification describes an Elkay product with design, quality, and functional benefits to the user. When making a comparison of other producers' offerings, be certain these features are not overlooked.

LKWERBSS	Elkay Stainless Steel 15-3/8" x 12-3/8" x 5-7/16" Rinsing Basket Spec Sheet (PDF)	
ERF750	Elkay 750-gallon Residential Replacement Filter Spec Sheet (PDF)	

In keeping with our policy of continuing product improvement, Elkay reserves the right to change product specifications without notice. Please visit elkay.com for the most current version of Elkay product specification sheets. This specification describes an Elkay product with design, quality, and functional benefits to the user. When making a comparison of other producers' offerings, be certain these features are not overlooked.