ELKAY®
SPECIFICATIONS

Elkay Outdoor ezH2O Lower Bottle Filling Station Bi-Level Pedestal with Pet Station Non-Filtered Non-Refrigerated Freeze Resistant
Model LK4420BF1LDBFRK

PRODUCT SPECIFICATIONS

Elkay Outdoor ezH2O® Lower Bottle Filling Station Bi-Level Pedestal with Pet Station Non-Filtered Non-Refrigerated Freeze Resistant. Features shall include 316 Stainless, Heavy Duty Vandal Resistant, Laminar Flow, Pet Fountain, Sealed Freeze Resistant. Furnished with Vandal Resistant bubbler. Mechanical Front Bubbler Button activation. Product shall be Floor Mount/Freestanding, for Outdoor applications, serving 2 station(s).

Special Features:	316 Stainless, Heavy Duty Vandal Resistant, Laminar Flow, Pet Fountain, Sealed Freeze Resistant
Finish:	Black (BK), Blue (BLU), Evergreen (EVG), Gray (GRY), Powder Coat (12 Color Options)
Power:	No Electrical Required
Bubbler Style:	Vandal Resistant
Activation by:	Mechanical Front Bubbler Button
Mounting Type:	Floor Mount/Freestanding
Chilling Capacity:	Non-refrigerated
Dimensions (L x W x H):	26" x 31" x 64"
Approx. Shipping Weight:	184 lbs.
Installation Location:	Outdoor
No. of Stations Served:	2
**When used in non-temperature controlled environments, unit(s) must be adequately winterized and/or protected from extreme heat to prevent damage where climates dictate.	

Special Note: Bottle Filler Stations 1 (Low), Bubbler Stations 1 (Upper), Choose from 12 color options

- Mechanically-Activated bubbler continues to supply water in event of service disruptions.
- Laminar flow provides clean fill with minimal splash.
- Base material constructed from marine-grade 316 stainless steel provides the ultimate corrosion protection from even the most corrosive elements.
- Pet Fountain: Features slow drainage for easy drinking.
- Sealed Freeze Resistant Valve System: Fully sealed freeze resistant system that minimizes chance of ground water contamination, and prevents drain water from mixing with fresh water. Designed for ground installation below the frost line.

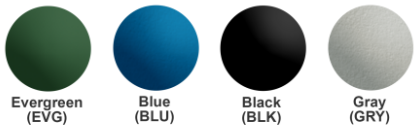

Included with Product: **Outdoor Bottle Filler, Freeze Resistant Valve**

▼ Ships in multiple boxes.

A Century of Tradition and Quality.
For more than 100 years, Elkay has been making innovative products and providing exceptional customer care. We take pride in offering plumbing products that make life easier, inspire change and leave the world a better place.

PRODUCT COMPLIANCE

ADA & ICC A117.1

ASME A112.19.3/CSA B45.4

Buy American Act

GreenSpec®

NSF/ANSI 61 & 372 (lead free)

Installation Instructions (PDF) - 1000003949

Warranty pertains to drinking water applications only. Non-drinking water applications are not covered under warranty.

Warranty (PDF)

PART:_____QTY: _____

PROJECT:_____

CONTACT:_____

DATE:_____

NOTES:_____

APPROVAL:_____

In keeping with our policy of continuing product improvement, Elkay reserves the right to change product specifications without notice. Please visit elkay.com for the most current version of Elkay product specification sheets. This specification describes an Elkay product with design, quality, and functional benefits to the user. When making a comparison of other producers' offerings, be certain these features are not overlooked.

Optional Accessories		
LK4471LHB	Locking Hose Bib Spec Sheet (PDF)	
97890C	Accessory - Direct Bury Adaptor Spec Sheet (PDF)	

In keeping with our policy of continuing product improvement, Elkay reserves the right to change product specifications without notice. Please visit elkay.com for the most current version of Elkay product specification sheets. This specification describes an Elkay product with design, quality, and functional benefits to the user. When making a comparison of other producers' offerings, be certain these features are not overlooked.

© 2023

MOUNTING INSTRUCTIONS and PLUMBING INSTRUCTIONS

Site and drainage excavation is required for fountain installation. Refer to owner's manual for site preparation details. Provide solid, well-drained surface to mount pedestal fountain (concrete pad recommended) with adequate support (300 lb. load minimum). (8) 3/8" minimum fasteners (not included) should be attached securely to mounting surface in order to secure fountain, (Refer to rough-in diagram), and be sure to allow an opening for the freeze-resistant valve in the ground as shown in the installation instructions that accompany the fountain. (Refer to page 4 for freeze resistant valve installation). NOTE: Pet Fountain will not be freeze resistant. Refer to local codes for any additional requirements.
Locate and install plumbing through ground as required. Assemble fountain to prepared site and mounting pad.
NOTE: Fountain is not furnished with service valve.
Position pedestal over plumbing and secure base to fasteners. Remove access panels and connect supply and water lines. Turn on water supply and check for leaks. Refer to owner's manual for detailed instructions. Reassemble access panels to pedestal.
Trap and service stop not included.

OPERATING PRESSURES:
Supply water 20 – 105 psi maximum

TOP VIEW

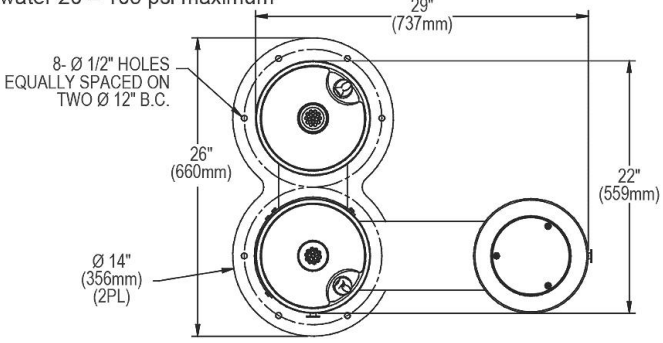

FRONT & SIDE VIEWS

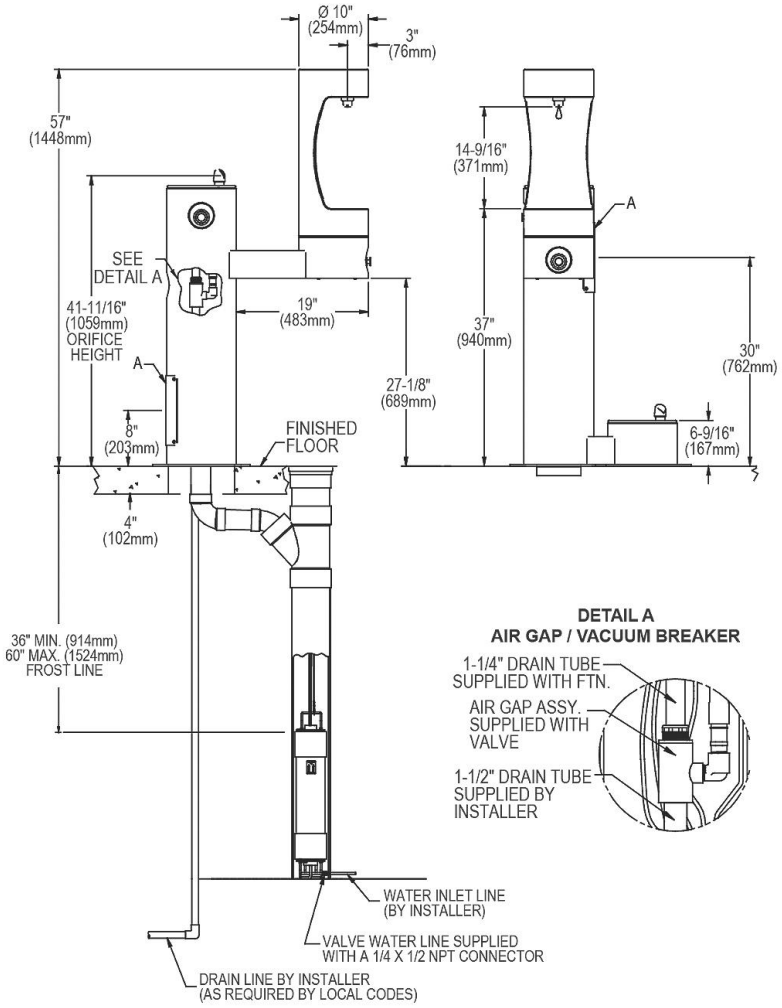

DETAIL A
AIR GAP / VACUUM BREAKER

SANITARY FREEZE-RESISTANT VALVE GROUND INSTALL DETAIL

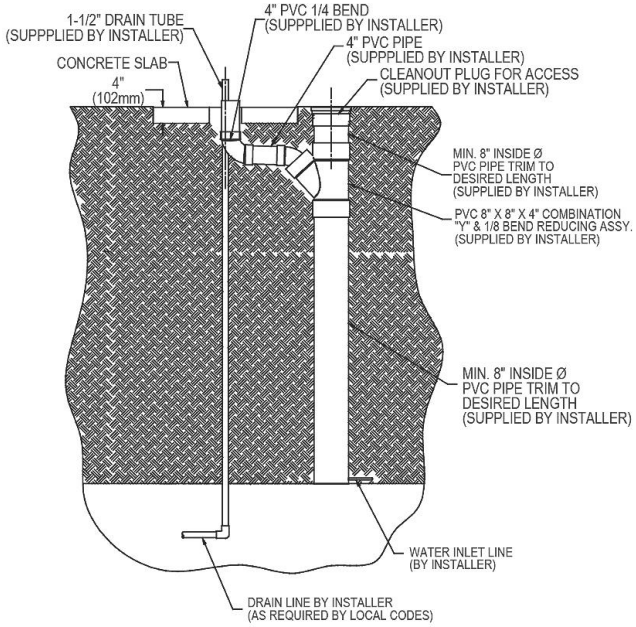

LEGEND
A = Access panel (8" X 10")

In keeping with our policy of continuing product improvement, Elkay reserves the right to change product specifications without notice. Please visit elkay.com for the most current version of Elkay product specification sheets. This specification describes an Elkay product with design, quality, and functional benefits to the user. When making a comparison of other producers' offerings, be certain these features are not overlooked.