ELKAY®
SPECIFICATIONS

Lustertone® Classic Stainless Steel 33" x 22" x 9" 60/40 Double Bowl Dual Mount Sink with Perfect Drain®

Model(s) LKHSR2509RPD

PRODUCT SPECIFICATIONS

Lustertone® Classic Stainless Steel 33" x 22" x 9" 60/40 Double Bowl Dual Mount Sink with Perfect Drain®. Sink is manufactured from 18 gauge 304 Stainless Steel with a Lustrous Satin finish, Rear Center drain placement, and Sides and Bottom pads.

Installation Type:	Drop-in, Undermount
Material:	304 Stainless Steel
Special Features:	Perfect Drain|Slim Rim
Finish:	Lustrous Satin
Gauge:	18
Sound Deadening:	Sides and Bottom pads
Number of Bowls:	2
Sink Dimensions:	33" x 22" x 10-1/2"
Bowl 1 Dimensions:	18" x 18-1/2" x 9"
Bowl 2 Dimensions:	11" x 17-11/16" x 9"
Drain Size:	3-3/8" (86mm)
Drain Location:	Rear Center
Minimum Cabinet Size:	36"
Mounting Hardware:	Part # 64090022 included for drop-in installation for countertops up to 3/4" (19mm) thick.
Template Included:	No
Cutout Template #:	1000000358

Template is available for download at elkay.com. CAD software will be required to open the template.

Cutout Dimensions for Drop-in Installation:
32-3/8" x 21-3/8" (822mm x 543mm) with 1-1/2" (38mm) corner radius

Perfect Drain: Seamlessly welded stainless steel collar eliminates the gap between a traditional drain and the sink for a more sanitary and gap free installation. Select garbage disposers can be installed on either sink bowl for user convenience. Please see our Garbage Disposer Compatibility Guide.

Included with Product: **Two LKPD1 Perfect Drains and strainers.**

A Century of Tradition and Quality.
For more than 100 years, Elkay has been making innovative products and providing exceptional customer care. We take pride in offering plumbing products that make life easier, inspire change and leave the world a better place.

Product Compliance: ASME A112.19.3/CSA B45.4
Accessory: ASME A112.18.2/CSA B125.2

Sinks are listed by IAPMO® as meeting the applicable requirements of the Uniform Plumbing Code®, International Plumbing Code®, and National Plumbing Code of Canada.

Clean and Care Manual (PDF)
Installation Instructions (PDF) - 1000005237
Installation Instructions (PDF) - 74180289_Disposer
Installation Instructions (PDF) - 74180340-USA_Drain
Installation Instructions (PDF) - Garbage_Disposer_Compatibility_Guide
Warranty (PDF)

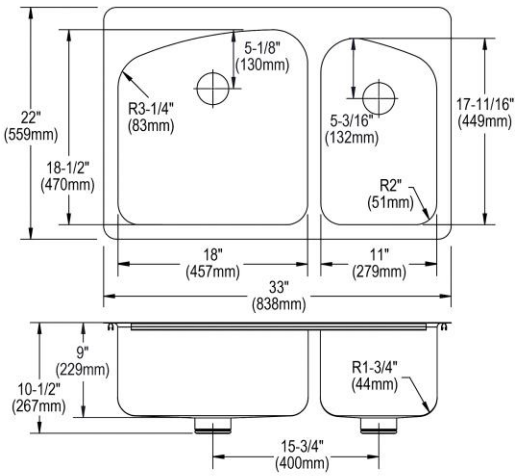

PART:_____QTY: _____
PROJECT:_____
CONTACT:_____
DATE:_____
NOTES:_____
APPROVAL:_____

In keeping with our policy of continuing product improvement, Elkay reserves the right to change product specifications without notice. Please visit elkay.com for the most current version of Elkay product specification sheets. This specification describes an Elkay product with design, quality, and functional benefits to the user. When making a comparison of other producers' offerings, be certain these features are not overlooked.

Hole Drilling Configurations:

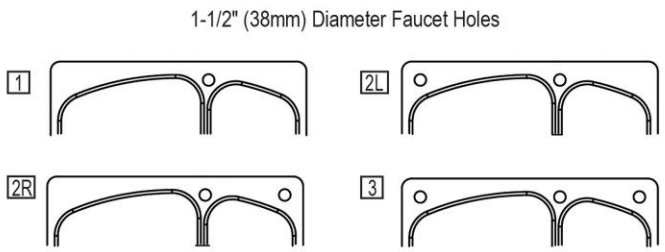

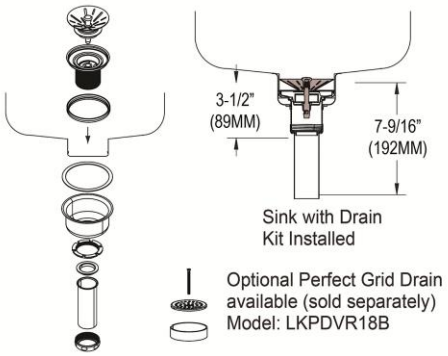

Installation Profile:

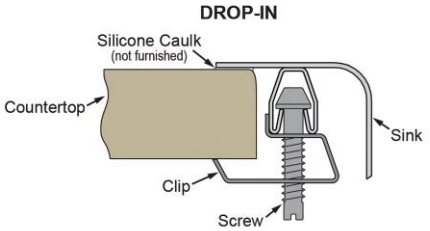

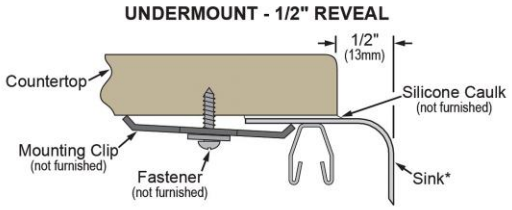

*Designed to affix to the underside of any solid surface countertop.

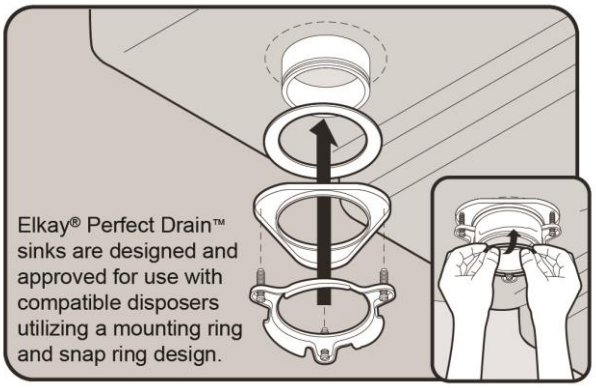

Optional Accessories		
LKWOBG1118SS	Elkay Stainless Steel 10" x 16-11/16" x 1-1/8" Bottom Grid Spec Sheet (PDF)	

In keeping with our policy of continuing product improvement, Elkay reserves the right to change product specifications without notice. Please visit elkay.com for the most current version of Elkay product specification sheets. This specification describes an Elkay product with design, quality, and functional benefits to the user. When making a comparison of other producers' offerings, be certain these features are not overlooked.

© 2024

LKWOBG1819SS	Elkay Stainless Steel 17" x 17-1/2" x 1-1/8" Bottom Grid Spec Sheet (PDF)	
LKCB1520LTHW	Elkay Hardwood 12" x 19-3/4" x 1" Cutting Board - (Top mount installation) Spec Sheet (PDF)	
LKCB1520LUHW	Elkay Hardwood 12" x 20-11/16" x 1" Cutting Board - (Undermount installation) Spec Sheet (PDF)	
LKDS35	3-1/2" Garbage Disposal Stopper / Strainer for use with Perfect Drain®-Satin Finish Spec Sheet (PDF)	
LKDS99	3-1/2" Garbage Disposal Stopper / Strainer for use with Perfect Drain®-Chrome Polished Stainless Steel Spec Sheet (PDF)	
LKPDVR18B	Perfect Drain® Chrome Plated Brass Body Vandal-resistant Strainer Spec Sheet (PDF)	

In keeping with our policy of continuing product improvement, Elkay reserves the right to change product specifications without notice. Please visit elkay.com for the most current version of Elkay product specification sheets. This specification describes an Elkay product with design, quality, and functional benefits to the user. When making a comparison of other producers' offerings, be certain these features are not overlooked.

© 2024