## PRODUCT SPECIFICATIONS

Lustertone® Classic Stainless Steel 25" x 22" x 8-1/8" Single Bowl Drop-in Sink. Sink is manufactured from 18 gauge 304 Stainless Steel with a Lustrous Satin finish, Center drain placement, and Sides and Bottom pads.

| | |
|---|---|
| **Installation Type:** | Drop-in |
| **Material:** | 304 Stainless Steel |
| **Finish:** | Lustrous Satin |
| **Gauge:** | 18 |
| **Sound Deadening:** | Sides and Bottom pads |
| **Number of Bowls:** | 1 |
| **Sink Dimensions:** | 25" x 22" x 8-1/8" |
| **Bowl 1 Dimensions:** | 21" x 15-3/4" x 7-3/4" |
| **Drain Size:** | 3-1/2" (89mm) |
| **Drain Location:** | Center |
| **Minimum Cabinet Size:** | 30" |
| **Mounting Hardware:** | Part # 64090012 included for countertops up to 3/4" (19mm) thick |
| **Template Included:** | No |
| **Cutout Template #:** | 1000001188 |

*Template is available for download at elkay.com. CAD software will be required to open the template.*

**Cutout Dimensions for Drop-in Installation:**
24-3/8" x 21-3/8" (619mm x 543mm) with 1-1/2" (38mm) corner radius

**Hole Drilling Configurations:**

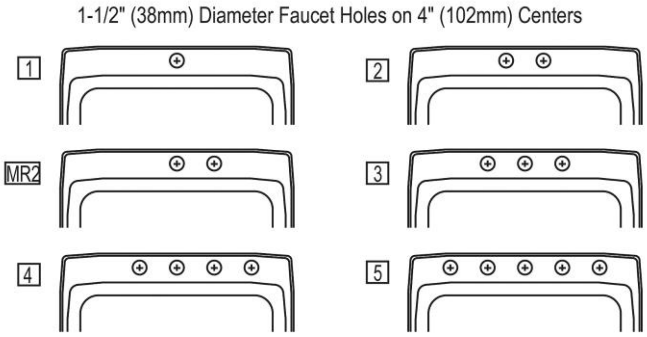

A Century of Tradition and Quality.
For more than 100 years, Elkay has been making innovative products and providing exceptional customer care. We take pride in offering plumbing products that make life easier, inspire change and leave the world a better place.

**Product Compliance:** ASME A112.19.3/CSA B45.4

Sinks are listed by IAPMO® as meeting the applicable requirements of the Uniform Plumbing Code®, International Plumbing Code®, and National Plumbing Code of Canada.

Clean and Care Manual (PDF)
Installation Instructions (PDF) - 1000005236
Warranty (PDF)

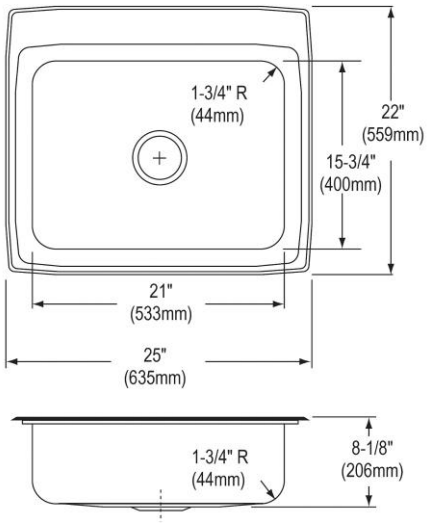


PART:_____QTY: _____
PROJECT:_____
CONTACT:_____
DATE:_____
NOTES:_____
APPROVAL:_____

*In keeping with our policy of continuing product improvement, Elkay reserves the right to change product specifications without notice. Please visit elkay.com for the most current version of Elkay product specification sheets. This specification describes an Elkay product with design, quality, and functional benefits to the user. When making a comparison of other producers' offerings, be certain these features are not overlooked.*

**Installation Profile:**

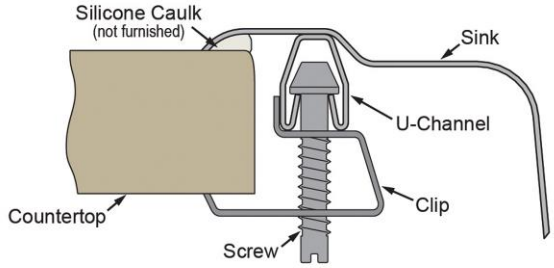


| Optional Accessories | | |
|---|---|---|
| LKWBG2115SS | Elkay Stainless Steel 20" x 14-3/4" x 1" Bottom Grid<br>Spec Sheet (PDF) | 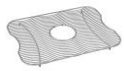 |
| CB1516 | Elkay Hardwood 15" x 16-3/4" x 3/4" Cutting Board<br>Spec Sheet (PDF) | |
| LK99 | Deluxe 3-1/2" Drain Type 304 Stainless Steel Body Strainer Basket Rubber Seal and Tailpiece<br>Spec Sheet (PDF) | |
| LKGT1041 | Elkay Gourmet Single Hole Kitchen Faucet Pull-out Spray and Lever Handle with Hi and Mid-rise Base Options<br>Spec Sheet (PDF) | |

*In keeping with our policy of continuing product improvement, Elkay reserves the right to change product specifications without notice. Please visit elkay.com for the most current version of Elkay product specification sheets. This specification describes an Elkay product with design, quality, and functional benefits to the user. When making a comparison of other producers' offerings, be certain these features are not overlooked.*