ELKAY®
SPECIFICATIONS

Elkay Lustertone® Classic Stainless Steel 19" x 18" x 4" Single Bowl Drop-in ADA Sink with Quick-clip
Model(s) LRADQ191840

PRODUCT SPECIFICATIONS

Elkay Lustertone® Classic Stainless Steel 19" x 18" x 4" Single Bowl Drop-in ADA Sink with Quick-clip. Sink is manufactured from 18 gauge 304 Stainless Steel with a Lustrous Satin finish, Rear Center drain placement, and Bottom only pads.

Installation Type:	Drop-in
Material:	304 Stainless Steel
Special Features:	Quick-Clip Mounting System
Finish:	Lustrous Satin
Gauge:	18
Sound Deadening:	Bottom only pads
Number of Bowls:	1
Sink Dimensions:	19" x 18" x 4"
Bowl 1 Dimensions:	16" x 11-1/2" x 3-7/8"
Drain Size:	3-1/2" (89mm)
Drain Location:	Rear Center
Minimum Cabinet Size:	24"
Mounting Hardware:	Included for 3/4" (19mm) countertop
Template Included:	No
Cutout Template #:	1000001260

Template is available for download at elkay.com. CAD software will be required to open the template.

Cutout Dimensions for Drop-in Installation:
18-3/8" x 17-3/8" (467mm x 441mm) with 1-1/2" (38mm) corner radius

Hole Drilling Configurations:

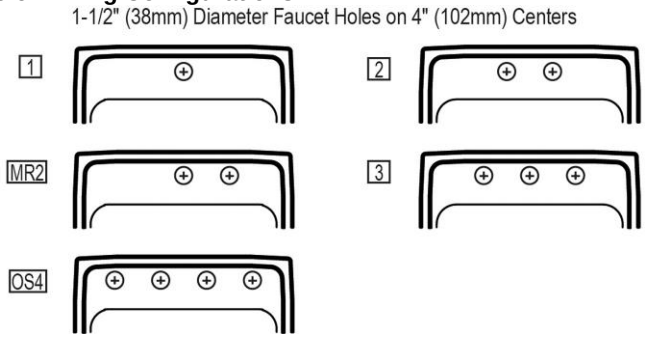

A Century of Tradition and Quality.
For more than 100 years, Elkay has been making innovative products and providing exceptional customer care. We take pride in offering plumbing products that make life easier, inspire change and leave the world a better place.

KBB READERS' CHOICE AWARDS 2024 WINNER

MADE IN USA

Product Compliance: ADA & ICC A117.1
ASME A112.19.3/CSA B45.4

Sinks are listed by IAPMO® as meeting the applicable requirements of the Uniform Plumbing Code®, International Plumbing Code®, and National Plumbing Code of Canada.

Complies with ADA & ICC A117.1 accessibility requirements when installed according to the requirements outlined in these standards.

Clean and Care Manual (PDF)
Installation Instructions (PDF) - 74180271
Limited Lifetime Warranty (PDF)

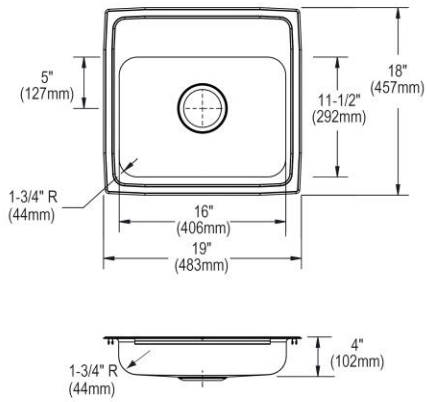

PART:_____QTY: _____

PROJECT:_____

CONTACT:_____

DATE:_____

NOTES:_____

APPROVAL:_____

In keeping with our policy of continuing product improvement, Elkay reserves the right to change product specifications without notice. Please visit elkay.com for the most current version of Elkay product specification sheets. This specification describes an Elkay product with design, quality, and functional benefits to the user. When making a comparison of other producers' offerings, be certain these features are not overlooked. Latest version of the spec sheet available: https://www.elkayfiles.com/spec-sheets/LRADQ191840_spec.pdf

Installation Profile:

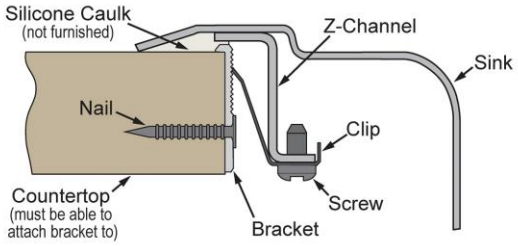

Optional Accessories		
LK99	Deluxe 3-1/2" Drain Type 304 Stainless Steel Body Strainer Basket Rubber Seal and Tailpiece Spec Sheet (PDF)	
LKAD35	3-1/2" Drain Fitting" Stainless Steel Body Strainer Basket and Offset Tailpiece Spec Sheet (PDF)	
LKGT1041	Elkay Gourmet Single Hole Kitchen Faucet Pull-out Spray and Lever Handle with Hi and Mid-rise Base Options Spec Sheet (PDF)	
LKSMHSL	Spec Sheet (PDF)	NO IMAGE AVAILABLE

In keeping with our policy of continuing product improvement, Elkay reserves the right to change product specifications without notice. Please visit elkay.com for the most current version of Elkay product specification sheets. This specification describes an Elkay product with design, quality, and functional benefits to the user. When making a comparison of other producers' offerings, be certain these features are not overlooked. Latest version of the spec sheet available: https://www.elkayfiles.com/spec-sheets/LRADQ191840_spec.pdf