ELKAY®
SPECIFICATIONS

Crosstown™
Top Mount Sink with Glass Rim
Models ECTGRO33229R2R

GENERAL
Highest quality sink fabricated of #18 (1.2mm) gauge, type 304 (18-8) nickel bearing stainless steel. Top Mount.

DESIGN FEATURES
Bowl Depth: 9" (229mm).
Coved Corners: Approximately 5/8" (15mm).
Glass Rim Height: 5/16"(8mm)
Glass Rim: Decorative black tempered glass.
Underside: Fully protected by heavy duty Sound Guard® under-coating designed to reduce condensation and dampen sound.
Finish: Exposed surfaces have a Polished Satin Finish.

OTHER
Drain Opening: 3-1/2" (89mm).
NOTE: All Elkay top mount sinks are designed to mount to the top of any solid surface countertop.
Sink only complies with ASME A112.19.3/ CSA B45.4

Sinks only are listed by IAPMO® as meeting the applicable requirements of the Uniform Plumbing Code®, International Plumbing Code®, and National Plumbing Code of Canada.

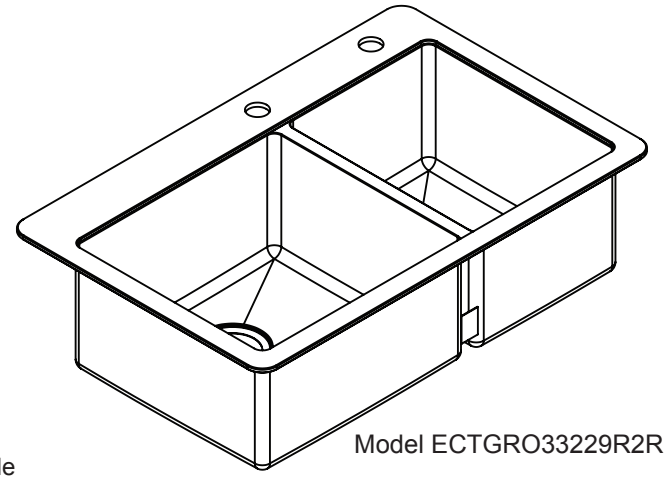

Model ECTGRO33229R2R

OPTIONAL ACCESSORIES
Bottom Grid: GFOBG1216SS (small bowl), GFOBG1716SS (large bowl).
Drain: LK35

SINK DIMENSIONS*

Model Number	Overall		Inside Left Bowl			Inside Right Bowl			Cutout in Countertop	No. of 1 1/2" (38mm) Dia. Faucet Holes.	Minimum Cabinet Size
	L	W	L	W	D	L	W	D			
ECTGRO33229R2R	33-1/8" (841mm)	21-3/8" (543mm)	17" (432mm)	16" (406mm)	9" (229mm)	12" (305mm)	16" (406mm)	9" (229mm)	See Template**	2	36" (914mm)

* Length is left to right. Width is front to back.
** Template 1000001898 is packed with every sink

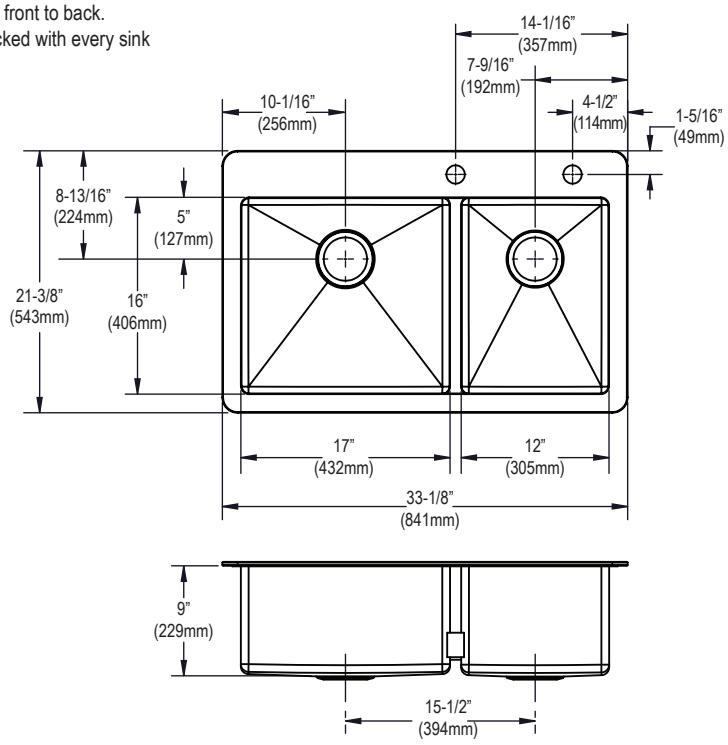

In keeping with our policy of continuing product improvement, Elkay reserves the right to change product specifications without notice. Please visit elkay.com for the most current version of Elkay product specification sheets.

This specification describes an Elkay product with design, quality, and functional benefits to the user. When making a comparison of others producers offerings, be certain these featrues are not overlooked.

Elkay
elkay.com

2222 Camden Court
Oak Brook, IL 60523

© 2014 Elkay

(Rev. 05/14) SPEC00223